ADVANCED ILLUMINATION
Precision LED Lighting for Vision and Imaging

AL126
Compact High Brightness Bar Light

- High intensity light in a small package - only 20mm (.79”) wide.
- Convenient M4 nut channel for mounting

Ordering Information

Stock Product: Shipped Next Day

AL126-WHIIC

Configured with inline Current Source

Standard Product Variation: Shipped Within Two Weeks

		Spectral wavelength	Optional power compatibility	Wash Down Option	Optional Light Conditioning	Alternative Connector
AL126	-	XXX	XX	X	X	XXX
		(blue) 470 (red) 625 (white) WHI	IC i3 C2 C3 C5 24	W	D (Diffuser)	M12* (i3: 5-pin male; IC/24: 4-pin male)

IC = iCS (requires 24v power supply)

i3 = Combined continuous-on and strobe over-drive (24 volt PS required.)

C2 = Ai Connector

C5 = Pulsar 320 Connector

* Available with IC, i3, and 24v options only

Dimensional Information

Click for Installation Models & Drawings

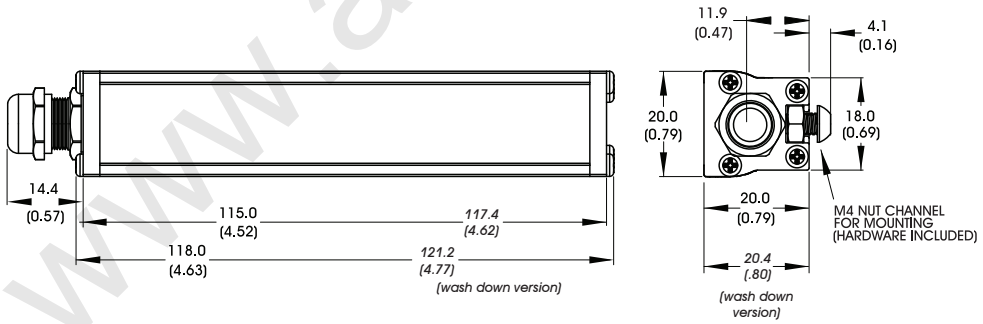

Cable Length: 1.5 Meter (59”)

DIMENSIONS ARE IN MILLIMETERS (INCHES)

STANDARD CABLE LENGTH: 1.5 Meter (59”)

DIMENSIONS ARE IN MILLIMETERS (INCHES)

Current Requirements

	blue	red	white	
24v	200	200	200	mA

General Specifications

Weight:	56.7 g (2.0 oz)	Operating Temperature:	0-60 C°
Finish:	Black Anodized	Meets Specifications:	

advancedillumination.com

For design help, accessories or pricing, please contact:
sales@avsupply or call: 1-858-565-1101

AUDIO VIDEO SUPPLY
1-800-284-2288 sales@avsupply.com
www.avsupply.com

Distributed By: Audio Video Supply -- Tel: 1-800-284-2288 -- www.avsupply.com

www.avsupply.com