DL2230

Diffuse Dome Light

- A modified, extremely efficient integrating light source
- Compact, space saving design - ideally suited for inspecting small, specular objects

Ordering Information

Standard Product:
Shipped Next Day

DL2230-660C2

Configured for use with Ai Power Supply

Standard Product Variation:
Shipped Within Two Weeks

	Spectral wavelength	Optional power Compatibility	Alternative Connector
DL2230 -	XXX	XX	XXX
	(UV) 395◊	IC	M12* (male)
	(blue) 470	IS	
	(green) 520	C2	
	(yellow) 590	C3	
	(orange) 625	C5	
	(red) 660	24	
	(infra-red) 880		
	(White) WHI		

IC = iCS (requires 24v power supply)
IS = iSU (requires 24v power supply)
C2 = Ai Connector
C3 = Pulsar 710 Connector
C5 = Pulsar 320 Connector
* Available with IC, IS, and 24v options only

◊ UV LEDs have a considerably shorter half-life than other LEDs (<1000hrs). For this reason Ai recommends these LEDs be used in strobe mode only. For applications requiring continuous 24v power, contact Ai for assistance.

Optimal working distance:
12.7mm (.5")
Effective Working Range:
12.7-50mm (.5"-2")

Light Consistency Information

Intensity Distribution

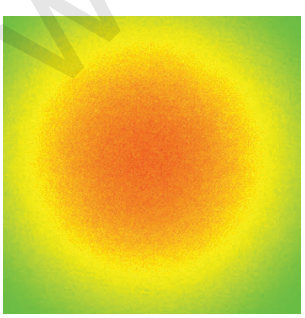

Intensity Cross Section

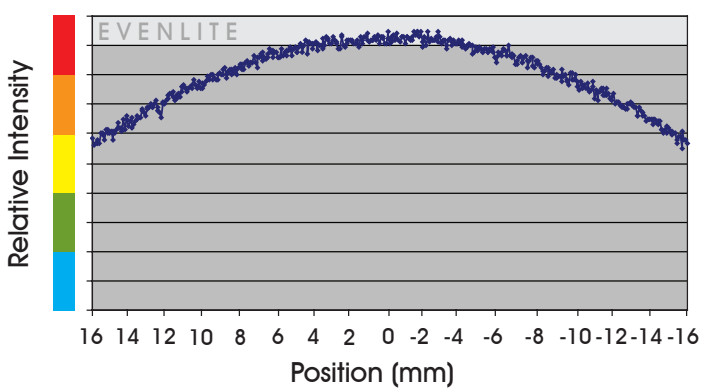

Distributed By: Audio Video Supply -- Tel: 1-800-284-2288 -- www.avsupply.com

www.avsupply.com

AUDIO VIDEO SUPPLY
1-800-284-2288 sales@avsupply.com
www.avsupply.com

Dimensional Information

Click for Installation Models & Drawings

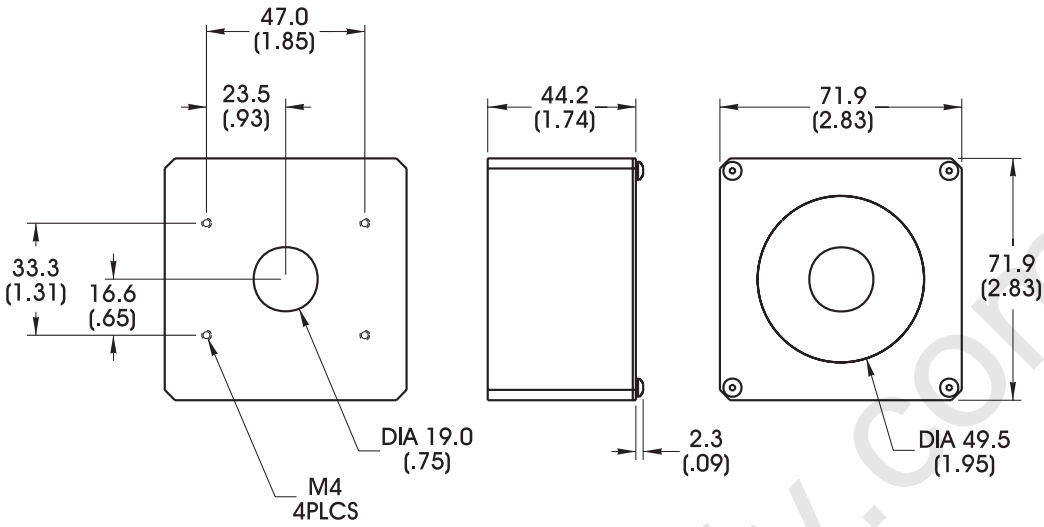

DIMENSIONS ARE IN MILLIMETERS (INCHES)

Cable Length: 1.5 Meter (59")

Standard Variation Current Specifications

	blue	green	yellow	orange	red	infra-red	white	
@24	120	120	60	60	60	60	120	mA
Ai	240	240	120	120	120	120	240	

General Specifications

Weight:	438 g (15.4 oz)
Finish:	Black Anodized
Operating Temperature:	0-60° C
Meets Specifications:	CE, RoHS

Standard Product Information

Red	Max. Illumination	Irradiance (mW/cm^2)	Illuminance (Lux)
	Working Distance: 12.5mm	.99	790
	Working Distance: 25.4mm	.59	460
	Lifetime	50,000 hrs	

White	Max. Illumination	Irradiance (mW/cm^2)	Illuminance (Lux)
	Working Distance: 12.5mm	1.34	490
	Working Distance: 25.4mm	.81	290
	Lifetime	10,000 hrs	

Additional Information

www.avsupply.com

Distributed By: Audio Video Supply -- Tel: 1-800-284-2288 -- www.avsupply.com