computar

# M1616FIC-MP

**f=16mm F1.6**
**for 2/3 type 5 Megapixel Cameras, Fixed-focal, Manual Iris**
**C-Mount**

| | | | | | | | |
|---|---|---|---|---|---|---|---|
| Model No. | | M1616FIC-MP | | Effective Lens Aperture | Front | φ21.9mm | |
| Focal Length | | 16mm | | | Rear | φ11.0mm | |
| Max. Aperture Ratio | | 1:1.6 | | Back Focal Length | | 13.3mm | |
| Max. Image Format | | 6.6mm x 8.8mm(φ11mm) | | Flange Back Length | | 17.526mm | |
| Operation Range | Iris | F1.6 - F16C | | Mount | | C-Mount | |
| | Focus | 1m - Inf. | | Filter Size | | M40.5 × 0.5 | |
| | Zoom | – | | Dimensions | | φ47.5mm ×45mm | |
| Control | Iris | Manual | | Weight | | 139.3 g | |
| | Focus | Manual | | | | | |
| | Zoom | – | | | | | |
| Angle of View | D | 2/3 type | 38.0° | 1/2 type | 28.1° | 1/3 type | 21.3° |
| | H | | 30.8° | | 22.7° | | 17.1° |
| | V | | 23.4° | | 17.1° | | 12.9° |
| Operating Temperature | | -10℃ - +50℃ | | | | | |

**Dimensions**

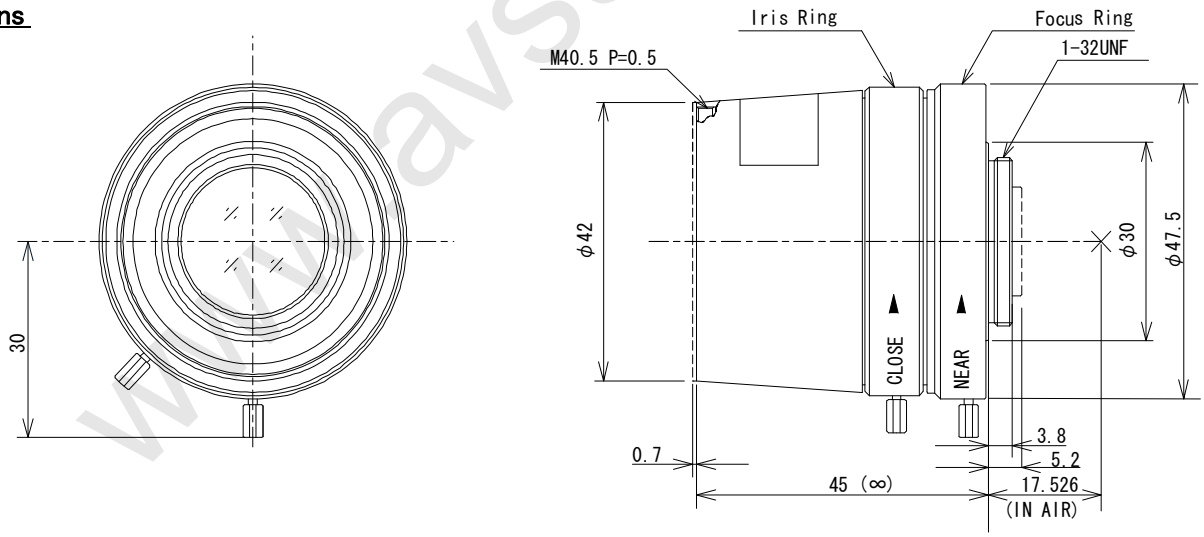


Specification is subject to change without any notice.

2012.11

For design help, accessories or pricing, please contact:
sales@avsupply or call: 1-858-565-1101


Distributed By: Audio Video Supply -- Tel: 1-800-284-2288 -- www.avsupply.com
www.avsupply.com
AUDIO VIDEO SUPPLY
1-800-284-2288 sales@avsupply.com
www.avsupply.com