RCM-28

- 116 dB dynamic range - for superior audio performance
- High DSP power - extensive signal processing including Equalizer, Crossover, Delay, Dynamics
- FIR filter - Linear Phase Filter, Linear Phase Brickwall Crossover
- Speaker protection - Peak Anticipation and TEMP (Thermal Energy Management and Protection) limiters
- Impedance measurement - testing from 20 to 20000 Hz

The RCM-28 Remote Control Module is a two-channel digital controller module for live sound reinforcement, PA and fixed installation applications. The module can be used in Electro-Voice TourGrade amplifier models. Installing the RCM-28 turns a conventional amp into a remote amplifier, which, at any time, provides complete overview of the overall system status and control of all system parameters. RCM-28 modules allow the integration of amplifiers into an OMNEO network with up to 100 devices in a single subnet without additional hardware. This offers the possibility to control and monitor an entire sound system from one or more PCs using the IRIS-Net - Intelligent Remote & Integrated Supervision - software package. In addition to digital signal processing functions, the RCM-28 also offers a digital audio input (AES/EBU), OMNEO network audio inputs and outputs, and freely programmable control inputs and control outputs.

Technical specifications

NETWORK AND GENERAL FEATURES	
Remote control and software	IRIS-Net, multiple PCs possible, MS Windows XP, Vista, Win 7
Maximum configuration	100 amplifiers with RCM-28 in a single subnet without additional hardware
Supervised amplifier parameters	Operation mode, temperature, output voltage and current, impedance of connected speakers, protection mode status, mains voltage and current, power consumption, pilot tone detection
Network supervision	Network failures, defective or missing amplifiers, failure protocol and messaging, redundant network possible
Audio monitoring	All input and output signals selectable over OMNEO
AUDIO SPECIFICATIONS	
Analog audio input	2 audio inputs on internal slot connector, pre-/post fader selectable
Input level (nominal)	+6 dBu/1.55 V
Input level (max. before clip)	+21 dBu/8.7 V
A/D conversion	24 Bit linear, sigma-delta, 128x oversampling
Digital audio input	AES3 (AES/EBU) format, XLR in/thru connectors
Input sample rates	32–192 kHz, internal sample-rate-converter

Audio output	2 audio outputs on internal slot connector
Output level (nominal)	+6 dBu/1.55 V
Output level (max. before limit)	+15 dBu/4.4 V
D/A conversion	24 Bit linear, sigma-delta, 128x oversampling
Audio network	
Network audio inputs	2 audio input channels, 48 kHz, OMNEO/Dante format
Network audio outputs	2 audio output channels, 48 kHz, OMNEO/Dante format
Monitor outputs	1 output channel via OMNEO; amplifier inputs and outputs selectable for monitoring
Frequency response	20–20000 Hz (±0.5 dB)
Signal-to-noise ratio (A-weighted)	ADC: 120 dB typical DAC: 120 dB typical AES3: 128 dB typical Analog In to Analog Out: 116 dB typical
THD+N	< 0.002 %
Crosstalk	< -100 dB at 1 kHz
Signal delay/latency	2.375 ms (analog in to analog out) 1.563 ms (AES3 in to analog out at external sync., 48 kHz)
SIGNAL PROCESSING	
Sample rate	48 kHz
Data format	24 Bit linear A/D and D/A conversion, 48 Bit processing
Signal processing	Dual core DSP, 500 MIPS
• Input PEQ	10 filters per channel, selectable as PEQ, Lo-Shelf, Hi-Shelf, Hi-Pass and Lo-Pass
• Input delay	0–1000 ms per channel (units: µs, ms, s, cm, m, inches, feet, samples)
• Array PEQ	5 filters per channel, selectable as PEQ, Lo-Shelf, Hi-Shelf, Hi-Pass, Lo-Pass and All-Pass
• Array delay	0–100 ms per channel (units: µs, ms, s, cm, m, inches, feet, samples)
• Output PEQ	6 filters per channel, selectable as PEQ, Lo-Shelf, Hi-Shelf, Hi-Pass, Lo-Pass and All-Pass
• Output crossover	Hi-Pass and Lo-Pass per channel, 6/12/18/24 dB Bessel/ Butterworth, 12/24 dB Linkwitz-Riley; alignment delay, 0–20 ms per channel
• Output FIR	Linear phase filter, linear phase brickwall crossover
• Output delay	0–1000 ms per channel (units: µs, ms, s, cm, m, inches, feet, samples)
• Output limiters	Peak Anticipation limiter and TEMP limiter per channel
• Other functions	Input routing, level, mute, polarity, sine and noise generator, pilot tone generator and detection, level meters, impedance measurement and load monitoring
INTERFACES	
OMNEO/Ethernet	2 x RJ-45 ports, 1000base-T/ 100base-TX, integrated switch (IRIS-Net Control)
GPIO control port	1 x 6-pole Euro block 2 control inputs (U_{in} max. 5 V) 2 control outputs (2x 100 mA) 2 reference outputs (+5 V, 200 mA; GND)
RCM-28 GENERAL SPECIFICATIONS	
Power supply	+5 V DC/1 A +15 V DC/180 mA -15 V DC/110 mA
Power consumption	9.35 W
Operating temperature	0° to 40° C
Product dimensions (Width by Height by Depth)	84.7 by 80.4 by 230.8 mm
Net weight	400 g
Shipping weight	930 g
ACCESSORIES	
6-pole Euro block connector	For GPIO control port

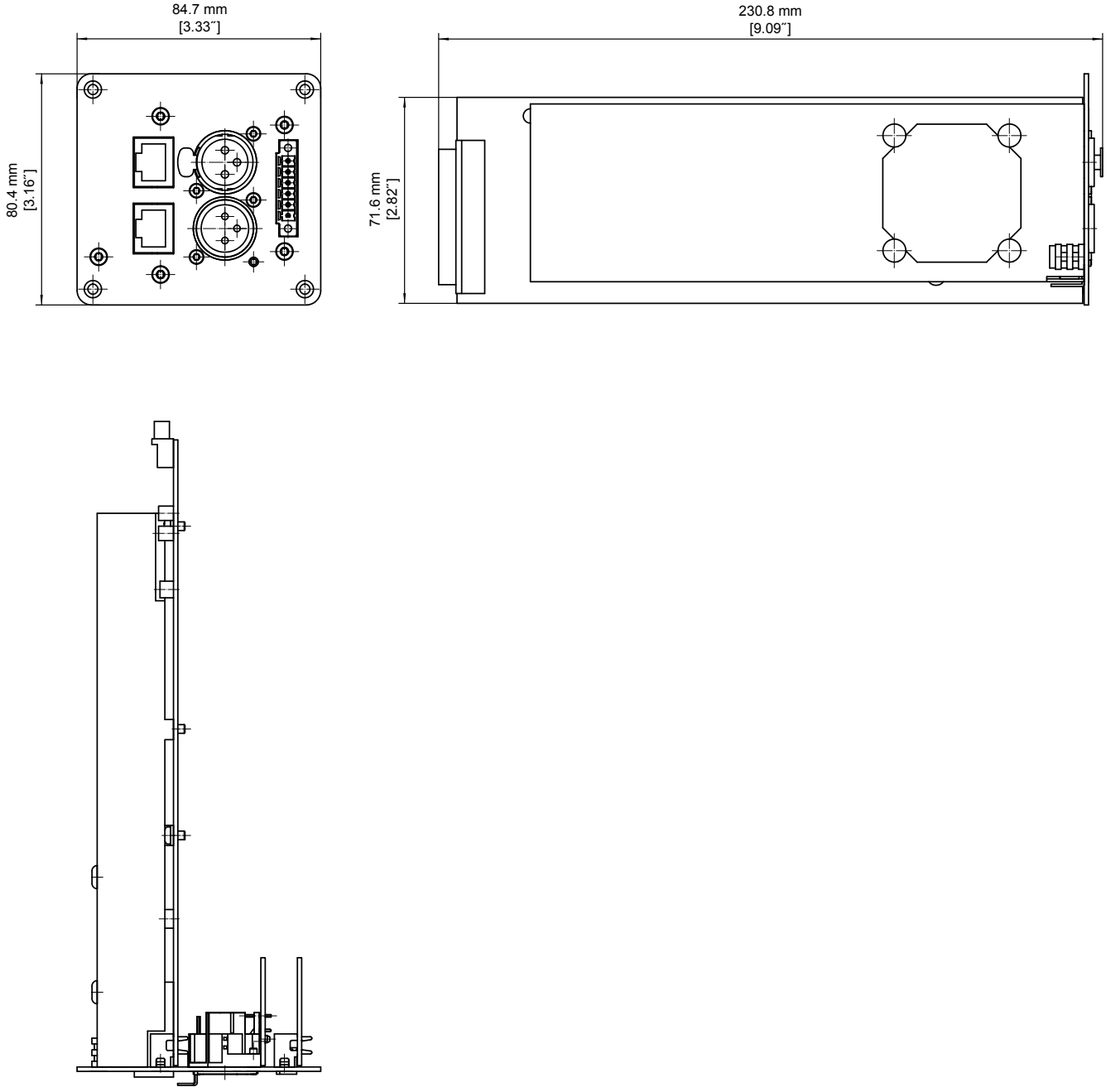

Dimensions

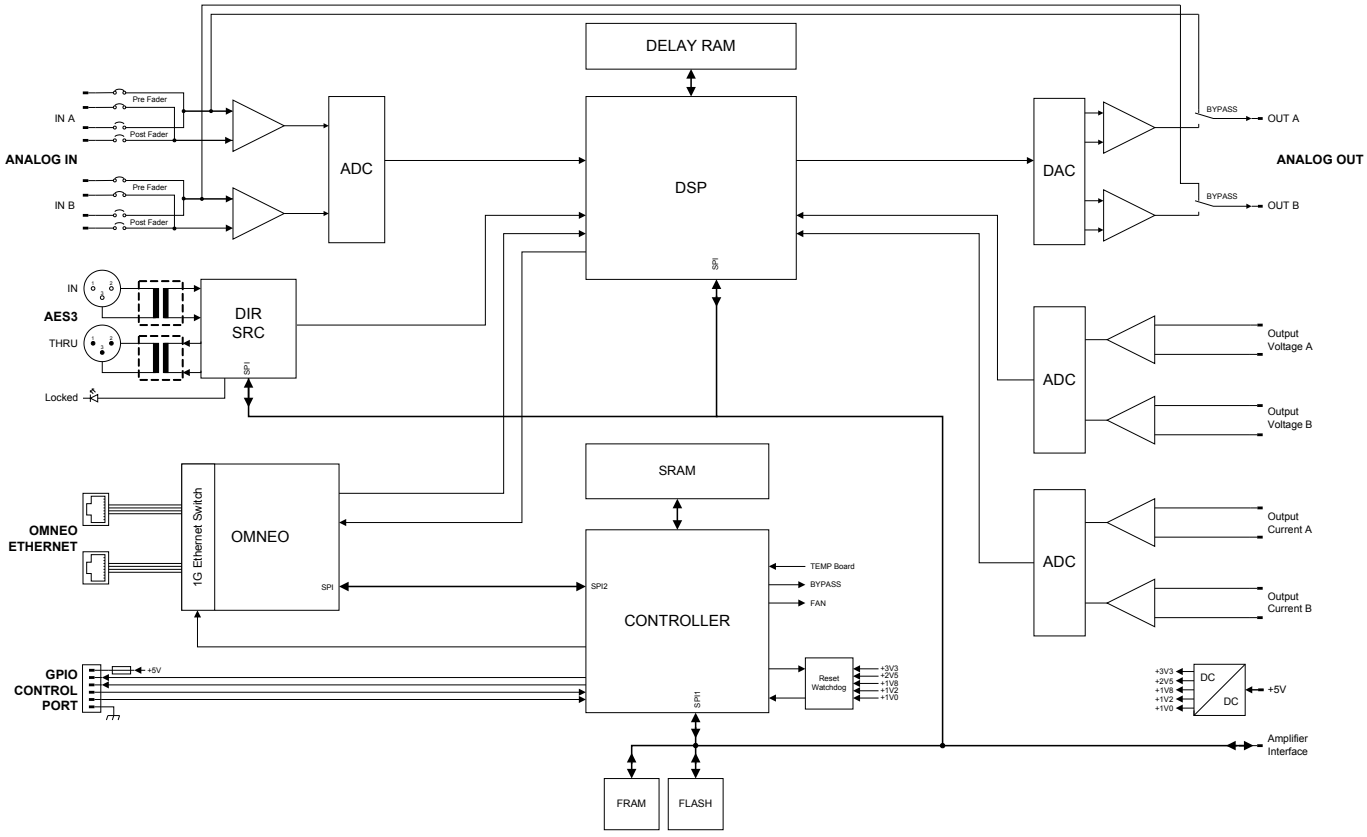

Circuit diagram

Installation/configuration notes

Installation

1. Switch the power amp's power off and pull the mains plug
2. Remove the cover panel from the rear panel (4 screws)
3. Insert the RCM-28 module in the slot and lock it in place on the rear panel using the 4 screws
4. Connect the needed interfaces (OMNEO, Control Port,...)
5. Reconnect the mains cord and switch on the power amplifier
6. The power amp automatically recognizes the installed RCM-28 module

Parts included

Quantity	Components
1	RCM-28
1	Owner's manual
1	Customer information
1	Connector 6-pole, Phoenix MC 1,5/6-STF-3,81 (F.01U. 104.179)
4	Screws combination torx, M3x10

Ordering information

RCM-28
Order number **F.01U.171.994**

Represented by:

Americas:
Bosch Security Systems, Inc.
12000 Portland Avenue South
Burnsville MN 55337
USA

www.electrovoice.com

© Bosch Security Systems 2013 | Data subject to change without notice
Document Number | Vs1 | 15. Jan 2013