EHN3160

1.3 Megapixel HD Network
Outdoor IR & WDR Dome Camera

Features

- 1/3" HD color CMOS image sensor delivers high resolution, and supports both H.264 and M-JPEG in full 30fps frame rate
- P-IRIS Lens with a stepper motor for exact positioning to improves the IRIS performance
- Wide Dynamic Range
- Provides True Day/Night functionality with automatic IR filter operation
- Multi profiles settings for allows choice of image quality to fit the environment
- High Performance Noise Filter improves image quality
- IP68 weather proof and IK10 vandal resistance
- Extended IR range of up to 30M/ 98.4 ft. with 33 LEDs
- Dual power capability PoE or 12VDC for flexible installation
- ONVIF / PSIA compliance interoperates with a broad range of systems
- Built-in SDHC slot for a SDHC card enabling local storage
- Local alarm inputs and outputs
- Two Way Audio transport (line level input/output)
- Supports EverFocus' CMS and mobile applications

Dimensions

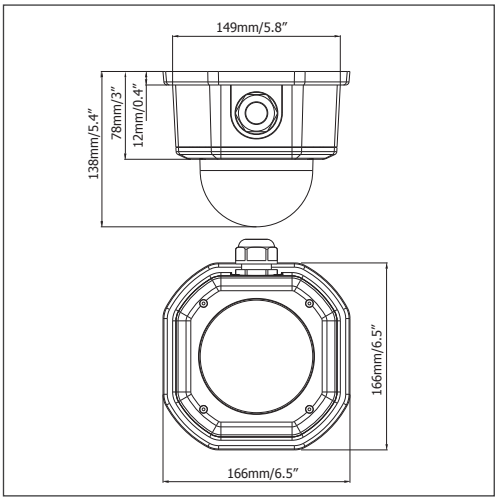

Specifications

Pickup Device	1/3" HD progressive scan CMOS sensor
Lens	Vari-focal lens, Auto IRIS, 3-9mm, F1.2-360C, P-IRIS
Minimum Illumination	Color : 0.1 Lux@F1.2 B/W :0.02@F1.2 0 Lux@F1.2 (IR LEDs on)
Day/Night	True Day/Night with IR cut filter
Shutter Time	8.5 ~1/60,000sec
Video Compression	H.264/M-JPEG/MPEG-4 (optional)
Max. Video Resolution	1280x1024
Frame Rate	720P@30fps
Angle of View Wide	Horizontal 96.4~31.7, Vertical 69.6~23.7, Diagonal 128.2~39.7"
S/N Ratio	>50dB
Privacy Mask	Yes
Region of Interest	Yes
Video Streaming	Multi-stream H.264, and M-JPEG: 1 stream in max. resolution at 30 fps; more streams if identical or limited in frame rate/resolution
Image Settings	Compression, Brightness, Sharpness, Contrast, Saturation, Hue, White balance, Exposure control, Backlight compensation, Rotation, Mirroring of images, Text and image overlay, Auto Gain Control, Auto White Balance
WDR	Yes
3D Noise	On/Off
Audio Compression	G.711
Operation Mode	Two-way audio
Interface	10Base-T/100Base-TX auto-negotiation, RJ-45 socket Support MDI/ MDI-X auto crossover function
Supported Protocols	TCP/IP, IPV6, UDP, ICMP, DHCP, NTP, DNS, DDNS, SMTP, SNMP, FTP, HTTP, HTTPs, PPPoE, UPnP, Bonjour, RTP, RTSP, RTCP, UDP, SSL, IGMP,ICMP, ARP, ONVIF, PSIA
Alarm Input/Output	1/1
Event Trigger	Alarm Input, Manual Trigger, Motion Detection, Tamper detection
Notification	Trigger alarm output, Send mail notification, Upload video to FTP, Record video to PC and Network alarm
SD Card	Secure Disk physical layer specification version 2.0, Supports SDHC Host Specification
Power Supply	12 VDC & PoE
Power over Ethernet	PoE IEEE 802.3at
Max. Power Consumption	12VDC 10.56W(IR LEDs on) PoE 13.11W(IR LEDs on)
Weather Proof	IP68
Vandal Resistance	IK10
Operating Temperature	-40°C~55°C/-40°F~131°F (DC12V) -20°C~55°C/-4°F~131°F (PoE)
Humidity	20% ~ 80% not condensing
Dimensions (W x H)	166 x 138mm/6.5" x 4.5"
Weight	1.62kgs/3.57lbs
Certificates	CE,FCC

* All product specifications are subject to change without notice

* Models vary in different countries. Please visit EverFocus regional websites for detailed ordering information
* Lens models and availability vary in different regions