GOYO OPTICAL INC.

Industrial Lens

Manual Zoom Lenses

Item No.GMZ8590056MCN

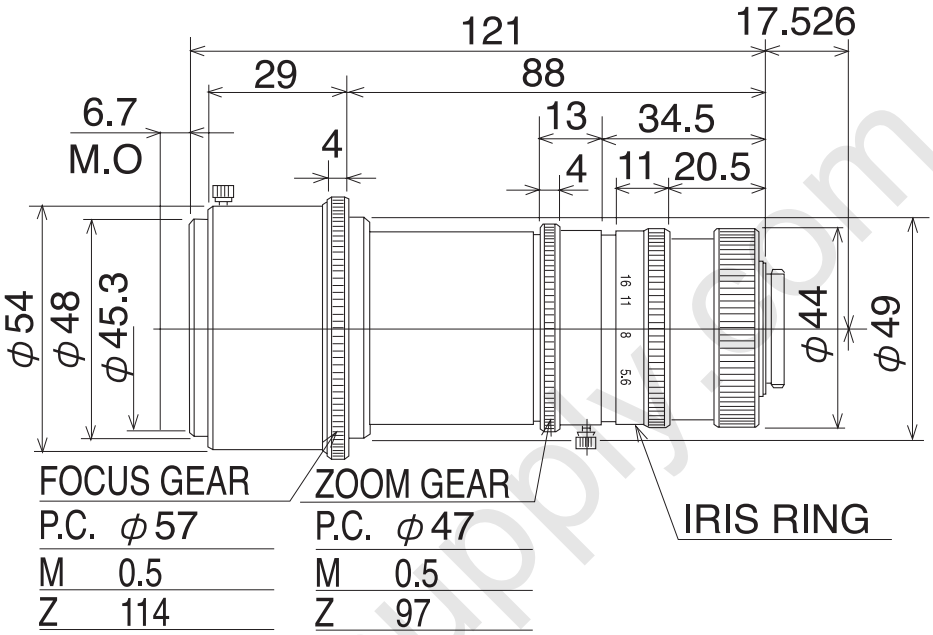

ITEM NO.	GMZ8590056MCN
Focal Length	8.5 - 90.0 (mm)
Iris Range	F5.6 - 16
Angle of View (H x V)	173mm x 129mm - 7.9mm x 6.2mm
MOD	290 - 135 (mm)
Filter Thread	M=48.0 , P=0.75
Dimention (D x L)	φ54 x 128 (mm)
Weight	320 (g)

GOYO OPTICAL Inc.

Japanese Office

3-8-31 HAMAZAKI,
ASAKA,
SAITAMA 351-0033,
JAPAN,
TEL:048-474-2235
FAX:048-474-7373
E-MAIL:info@goyooptical.com

German Office

KURHAUSSTR,3
ROOM N'19
D-55543 BAD KREUZNACH
GERMANY
TEL:0671-4822255
FAX:0671-43603
E-MAIL:info@go

For design help, accessories or pricing, please contact:
sales@avsupply or call: 1-858-565-1101

AUDIO VIDEO SUPPLY
1-800-284-2288 sales@avsupply.com
www.avsupply.com

Distributed By: Audio Video Supply -- Tel: 1-800-284-2288 -- www.avsupply.com

www.avsupply.com