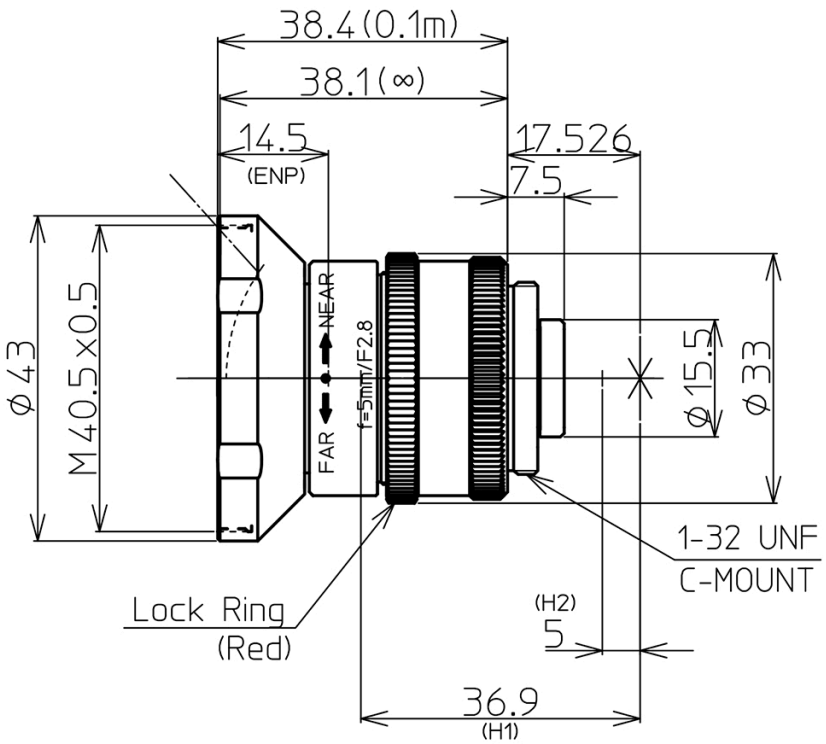

2/3" 2.8/5mm C		2/3"	1/1.8"	1/2"
FOCAL LENGTH		f=5mm		
MAX. DIAMETER (RATIO)		F=1:2.8 4 5.6 8		
PICTURE SIZE		6.6x8.8mm	5.4x7.2mm	4.8x6.4mm
ANGLE	VER. ANGLE	66.9°	57.1°	51.3°
	HOR. ANGLE	82.4°	71.7°	65.2°
	DIA. ANGLE	95.0°	83.8°	77.4°
DISTORTION (TV)		0.5%		
SHOOTIG RANGE AT	VER.	150.8mm	123.3mm	109.4mm
MINIMUM FOCUS	HOR.	200.8mm	164.4mm	146.2mm
DISTANCE	DIA.	250.7mm	205.2mm	182.6mm
MINIMUM FOCUS DISTANCE		0.1m		
FLANGE BACK		17.526mm in air		
BACK FOCUS		10.0mm in air		
FILTER SCREW SIZE		M40.5x0.5		
FRONT/REAR EFFECTIVE DIA.		FRONT φ28.0mm	REAR φ10.0mm	
MOUNT		C-MOUNT		
EXIT PUPIL		-34.7mm		
TEMPERATURE RANGE		-10~+50°C		
STORAGE TEMPERATURE RANGE		-20~+60°C		
RESOLUTION CENTER/CORNER		CENTER 120lp/mm	CORNER 100lp/mm	
WEIGHT		73g		

NOTE:Specifications and availability are subject to change without notice

注）本仕様については、予告なしに変更する場合があります。

		尺度 1/1	工場番号 HR982SR
		機種名	2/3" F2.8 f=5mm
2017.12.26	ENP追記		
2017.11.21	重量記載	機種番	LM5JCM-V外観図
2017.2.27	作成年月日		

Kowa