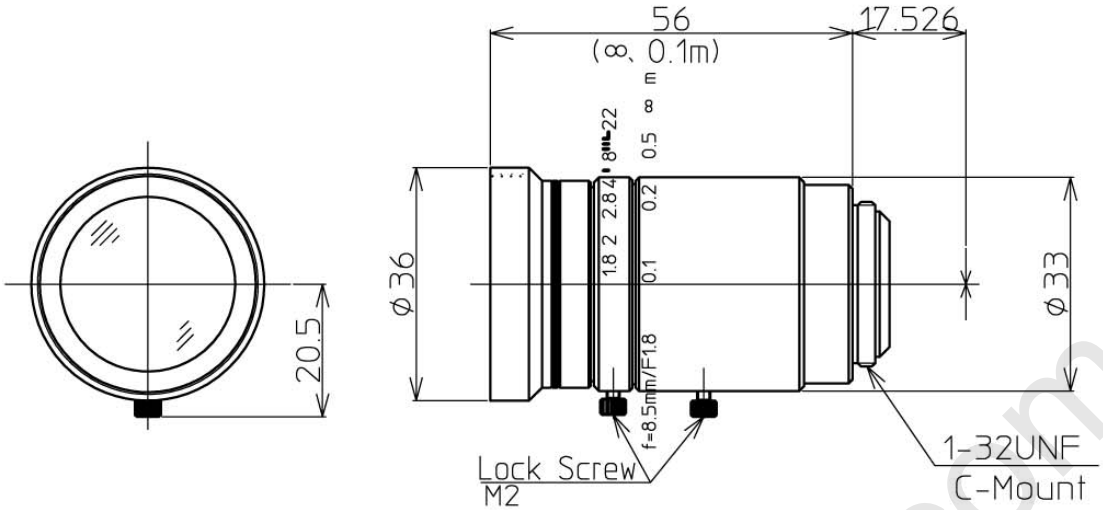

2/3" 1.8/8.5mm C		1/2"	1/3"
FOCAL LENGTH	f=8.5mm		
MAX. DIAMETER (RATIO)	F=1:1.8~22		
ELEMENT	9 GROUPS 11 ELEMENTS		
PICTURE SIZE	6.6x8.8mm	4.8x6.4	3.6x4.8
ANGLE VER. ANGLE	41.9°	31.2°	23.6
HOR. ANGLE	54.0°	40.8°	31.2°
DIA. ANGLE	64.6°	49.8°	38.4°
DISTORTION (TV)	0.31%	-	-
SHOOTIG RANGE AT VER.	99.6mm	72.2mm	54.0mm
MINIMUM FOCUS HOR.	133.2mm	96.5mm	72.2mm
DISTANCE DIA.	166.5mm	121.0mm	90.4mm
MINIMUM FOCUS DISTANCE	0.1m		
FLANGE BACK	17.526mm in air		
BACK FOCUS	12.1mm in air		
FILTER SCREW SIZE	M34x0.5		
FRONT/REAR EFFECTIVE DIA.	FRONT Ø26.7mm REAR Ø13.1mm		
MOUNT	C-MOUNT		
EXIT PUPIL	-128.2		
TEMPERATURE RANGE	-10~+50° C		
STORAGE TEMPERATURE RANGE	-20~+60° C		
RESOLUTION CENTER/CORNER	CENTER 200lp/mm CORNER 160lp/mm		
LENS COATING	WIDE BAND MULTI COATING		
WEIGHT	115 g		

NAVITAR

		尺度 1/1	承認 八木	製図 富永
		機種名 2/3" F1.8 f=8.5mm		
09.08.31	作成年月日	機種番 1-19553		

Distributed By: Audio Video Supply -- Tel: 1-800-284-2288 -- www.avsupply.com

www.avsupply.com

For design help, accessories or pricing, please contact:
sales@avsupply or call: 1-858-565-1101

AUDIO VIDEO SUPPLY
1-800-284-2288 sales@avsupply.com
www.avsupply.com