Schneider KREUZNACH

Line scan lens

Makro-Symmar 5.6/120-0.75x

Wherever complex web and surface inspections are concerned, the line scan image capture method is used in most cases. Due to the principle used, this method requires a very careful choice of camera and an optimally adapted lens in order to achieve maximum system performance. It is essential to observe important application-specific and physical parameters: the size of the CCD or CMOS imaging sensor in the camera defines the minimum required image circle of the lens.

Makro-Symmar 5.6/120

Key Features

- Very high optical image quality in the large sensor range
- Vibration-insensitive for stable optical performance
- Reverse position of the lens possible to enlarge the magnification range
- Lockable distance and aperture settings
- Use in best azimuth position possible
- Industry-compatible V-mount interface
- 100% quality control guarantees reliability and constant quality
- Low maintenance requirements, therefore high system availability

Applications

- Web and surface inspections
- Quality control
- FPD inspection
- PCB inspection
- OLED inspection
- Line scan applications

Technical Specifications

F-number	5.6
Focal length	120.2 mm
Image circle	86 mm
Magnification	-0.75
Transmission	400 - 1000 nm
Interface	V-Mount
Weight	170 gr.
Option	Optical filter

Makro-Symmar 5.6/120-0.75

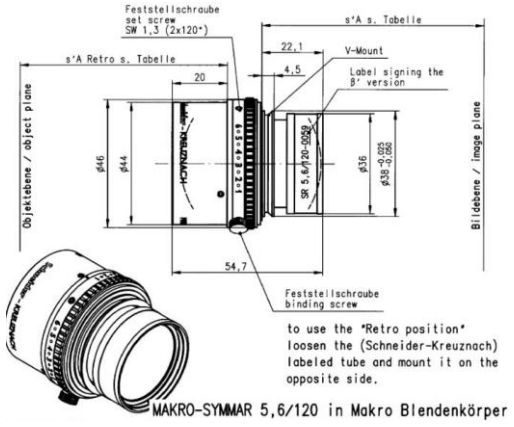

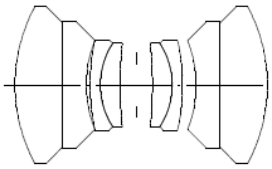

M-SR 5.6/120 BETA -0.625..-0.875

f'	= 120.2 mm	β'_P	= 0.994
s_F	= -94.8 mm	s_{EP}	= 26.1 mm
$s'_{F'}$	= 94.1 mm	s'_{AP}	= -25.4 mm
HH'	= -1.2 mm	Σd	= 50.4 mm

M-SR 5.6/120 BETA -0.625..-0.875

MODULATION with reference to the relative image height

Wavelength λ [nm] :	555	655	605	505	455	405
Spectral weighting [%] :	19.6	23.7	22.2	15.7	12.1	6.7
Spatial frequency R [1/mm] :	20	40	80			
Format [mm X mm] :	90.0 X 0.0					
Diagonal 2u' [mm] :	90.0					

radial ——
tangential — —

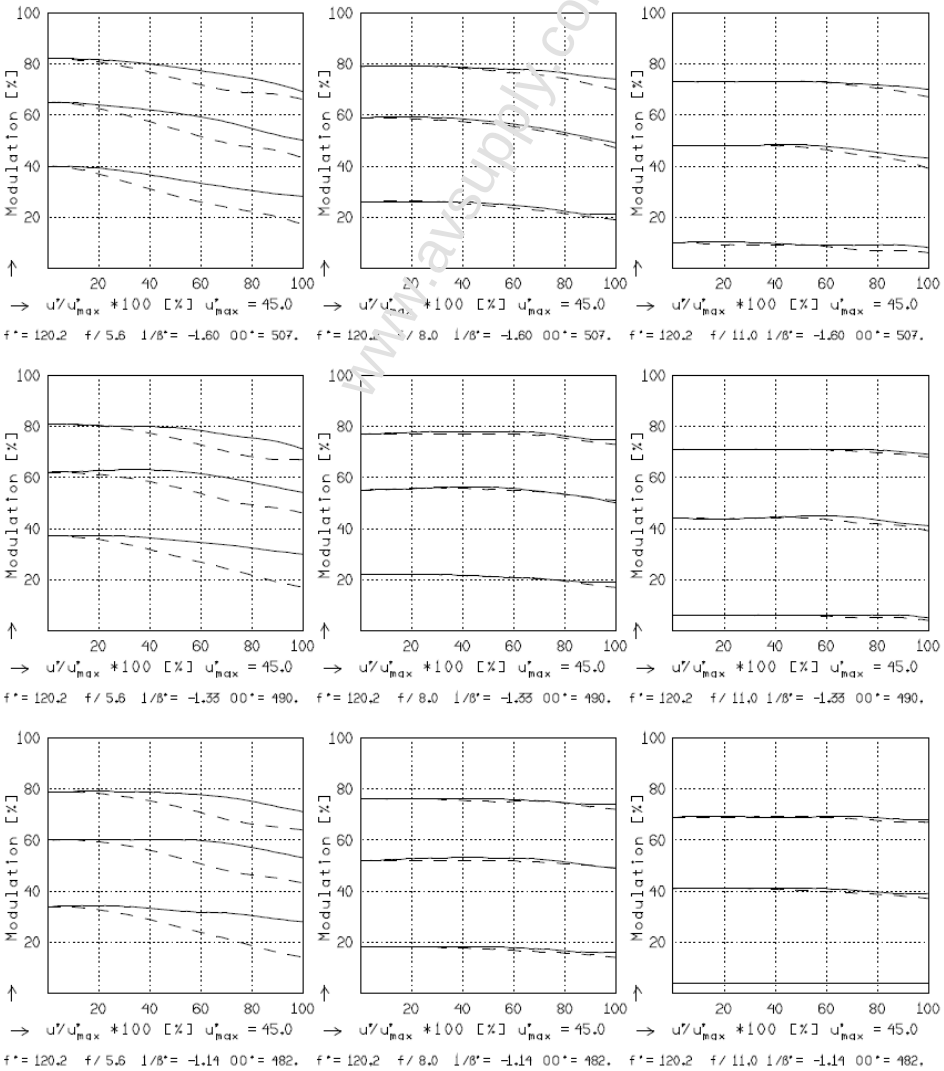

Focusing : MTF_{max} at f / 5.6 . R = 80 1/mm. u'/u'_{max} = 0

Makro-Symmar 5.6/120-0.75

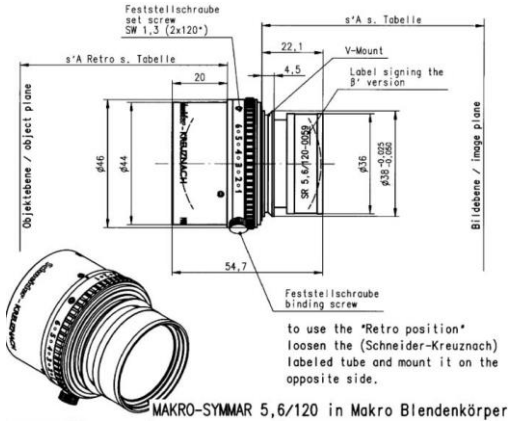

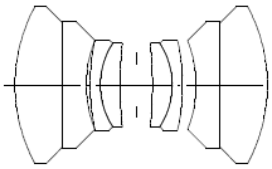

M-SR 5.6/120 BETA -0.625..-0.875

f' =	120.2 mm	β'_p =	0.994
s_F =	-94.8 mm	s_{EP} =	26.1 mm
$s'_{F'}$ =	94.1 mm	s'_{AP} =	-25.4 mm
HH' =	-1.2 mm	Σd =	50.4 mm

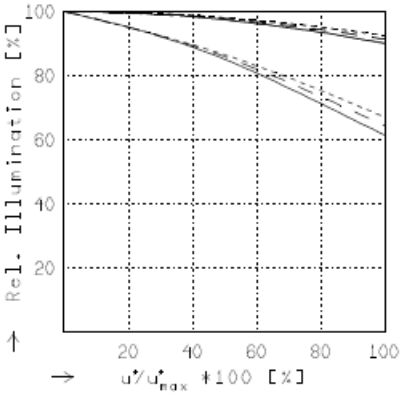

RELATIVE ILLUMINATION

The relativ illumination is shown for the given focal distances or magnifications.

	f / 5.6	f / 8.0	f / 11.0
——	β' = -0.6250	u'_{max} = 45.0	OO' = 507.
— —	β' = -0.7500	u'_{max} = 45.0	OO' = 490.
-----	β' = -0.8750	u'_{max} = 45.0	OO' = 482.

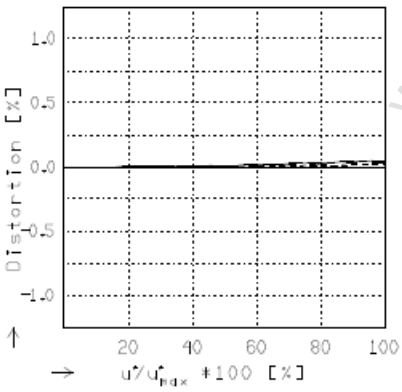

DISTORTION

Distortion is shown for the given focal distances or magnifications. Positive values indicate pincushion distortion and negative values barrel distortion.

——	β' = -0.6250	u'_{max} = 45.0	OO' = 507.
— —	β' = -0.7500	u'_{max} = 45.0	OO' = 490.
-----	β' = -0.8750	u'_{max} = 45.0	OO' = 482.

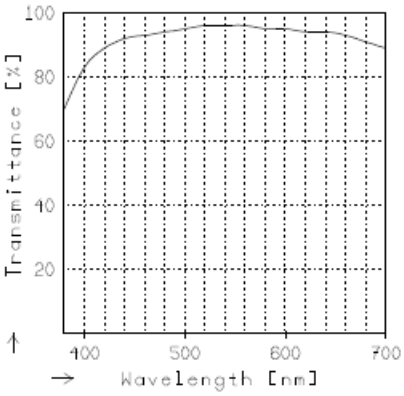

TRANSMITTANCE

Relative spectral transmittance is shown with reference to wavelength.