Tokina

MOTORIZED ZOOM LENS

TM22Z1022GAIDC	f = 10-220mm F/2.2 DC AUTO IRIS
TM22Z1022GAIDCPN	f = 10-220mm F/2.2 DC AUTO IRIS with Preset(Focus/Zoom)

SPECIFICATIONS

MODEL No.		**TM22Z1022GAIDC / TM22Z1022GAIDCPN**
IMAGE FORMAT		1/2"
MOUNT		C-Mount
FOCAL LENGTH		10 - 220mm
APERTURE		F1 : 2.2
APERTURE RANGE		F2.2 - 360
ANGLE OF VIEW ( ) = 1/3"	DIAGONAL	W41.99° - T2.17° (W32.11° - T1.64°)
	HORIZONTAL	W34.14° - T1.74° (W25.90° - T1.31°)
	VERTICAL	W25.90° - T1.31° (W19.53° - T0.99°)
M. O. D.		1.8m
BACK FOCAL LENGTH		11.0mm
FILTER SIZE		M67mm P=0.75
DIMENSIONS		W80.0 X H101.0 X L158.7mm
WEIGHT		800g
OPERATING TEMPERATURE		-10°C ~ +60°C

• FOCUS / ZOOM	FOCUS	ZOOM
INPUT VOLTAGE	DC+6 ~ +12V	DC+6 ~ +12V
CURRENT CONSUMPTION	Less than 60mA	Less than 60mA
RESPONSE SPEED	Approx. 4.5 sec.	Approx. 4.5 sec.

CABLE CONNECTIONS

• DC AUTO IRIS (4-Pins Connector)

SIGNAL	CABLE COLOR	PIN #
Damping Coil -	RED	1
Damping Coil +	BLACK	2
Driving Coil +	WHITE	3
Driving Coil -	GREEN	4

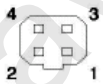

■ ZOOM / FOCUS

FUNCTION	CABLE COLOR	POLARITY	DIRECTION
ZOOM	GREEN	+ (-)	Wide (Tele)
	WHITE	- (+)	
FOCUS	BLACK	+ (-)	Inf. (Near)
	RED	- (+)	

■ POTENTIOMETER-PRESET (TM22Z1022GAIDCPN Only)

CABLE COLOR	CONNECTION
ORANGE	Pot. Supply
BLUE	Focus Pot. Wiper
PURPLE	Pot. Return
GRAY	Zoom Pot. Wiper

Wiring details for potentiometer-preset

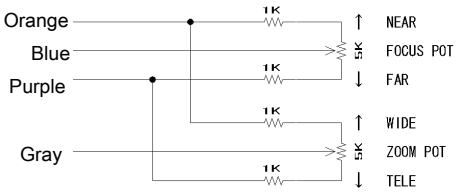

APPERANCE

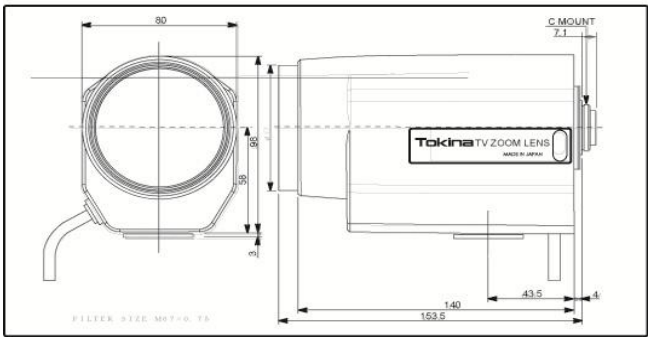

*Design and specifications are subject to change without notice.

Distributed By: Audio Video Supply -- Tel: 1-800-284-2288 -- www.avsupply.com

www.avsupply.com

For design help, accessories or pricing, please contact:
sales@avsupply or call: 1-858-565-1101

AUDIO VIDEO SUPPLY
1-800-284-2288 sales@avsupply.com
www.avsupply.com