1. PRODUCT DESCRIPTION

Model CS8630BH is a miniature camera series featuring its ultra-small light-weight body. The CS8630BH is designed mainly for factory automation, machine vision, and image measurement application.

2 FEATURES

(1) High resolution

The 380,000 pixel CCD realizes the horizontal resolution of 570TV lines.

High-density images with minimum moire-fringes & beatings are obtained

(2) Ultra-compact & light-weight body

The camera features its ultra-small light-weight body. Its super-small body will free you from much of your space restriction problem. The camera is driven by DC12V.

(3) Electronic shutter

The built-in electronic shutter allows this camera to capture a fast-moving object clearly and sharply.

(4) AGC (Automatic Gain Control)

This series is equipped with AGC function. With the AGC, the camera obtains optimal images constantly even when the amount of incoming light fluctuates.

(5) Restart/Reset

When the restart/reset function set ON, the camera captures images at any timing given by R.R. pulse input (VD input).

Remark : CS8620BHi, CS8620BHCi are possible for a restart/reset operation only at the field integration mode.

(6) SS (Special shutter) & RTS (Random trigger shutter)

This camera is fitted with special shutter and random trigger shutter function, which allows the camera to capture images cued by external trigger input.

(7) Near-infrared region sensitivity (Model -----H type only)

The CCD has a near-infrared-region sensitivity. This model captures clear images even under near-IR shooting condition.

3. CONFIGURATION

(1) Camera body ····· 1

(2) Accessory

Manual ····· 1

4. SPECIFICATION

(1) TV system	Based on EIA standard
(2) Image sensor	Interline CCD
・Total pixel counts	811(H)×508(V)
・Active pixel counts	768(H)×494(V)
・Video output pixel counts	756(H)×485(V)
・Cell size	6.35×7.4μm
・Scanning area	4.8×3.6mm (type-1/3)
・H drive frequency (Internal sync)	14.31818MHz ±100ppm
(3) Scanning lines	525 lines
(4) Scanning format	2 : 1 interlace
(5) Sync System	Internal/External (automatic change over)
(6) Scanning frequencies (internal synchronization mode)	
Horizontal drive (H)	15.734kHz ±100ppm
Vertical drive (V)	59.94Hz ±100ppm
(7) Aspect ratio	4:3
(8) Sensitivity	
・Standard (GAIN:MGC, γ=1.0)	400 lx 、F8 (3100K)
・Minimum (GAIN:MAX、γ=0.45)	0.2 lx 、F1.4
(9) Video output	VS:1.0V(p-p) /75Ω
VS (Video + SYNC)	
(10) Resolution	
Horizontal	570 TV lines
Vertical	485 lines (350 TV lines)
(11) S/N	60dB(p-p)/rms (typical)
	(GAIN:MGC、γ=1.0)
(12) Input signal	
①External sync pulses	HD・VD/SYNC/VS
・Pulse level	HD、VD、SYNC:2～6V(p-p)
	VS:1.0(SYNC0.3)V(p-p)
・Input impedance	75Ω / High Switch-able by the panel SW
	(Initial factory setting: High)
・Scanning system	2 : 1 interlace

・Polarity	Negative
・Pulse width	HD:6.4±3μs
	VD:150～800μs
・Frequency	
Horizontal (fH)	fH=15.734kHz ±2%
Vertical (fV)	fV=2fH/525
・Scanning lines	525 lines
・Phase different	The difference in phase between the falling edge of VD and that of HD is shown in the figure below.

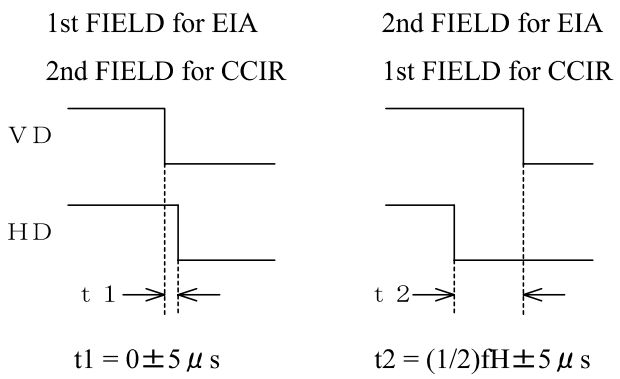

②Shutter trigger (TRG)

・Pulse level	VL=0～0.5V VH=2～5V
・Input impedance	High impedance
・Polarity	Positive
・Pulse width	2μs～1/4s

(13) Output signal

①HD/VD pulses	Under internal sync operation, output available by the panel SW selection (Initial factory setting: IN)
・Output level	HD: 4.5±0.5V(p-p)
(high impedance)	VD: 5.0±0.5V(p-p)
・Scanning system	2 : 1 interlace
・Polarity	Negative
・Pulse width	HD: 6.36±1μs, VD: 572±10μs

・Frequency

Horizontal (fH) fH=15.734kHz ±100ppm

Vertical (fV) fV=2fH/525

・Scanning lines 525 lines

②Clock pulse

・Output level 2.0±0.3V(p-p) (high impedance)

・Frequency (Under internal synchronization)

14.31818 MHz±100ppm

③WEN Under random trigger shutter operation, WEN is output during the period starting from the VIDEO OUT START VD falling edge through the VIDEO OUT END VD falling edge.

・Polarity Positive

・Diagram The circuit is shown in the figure below.

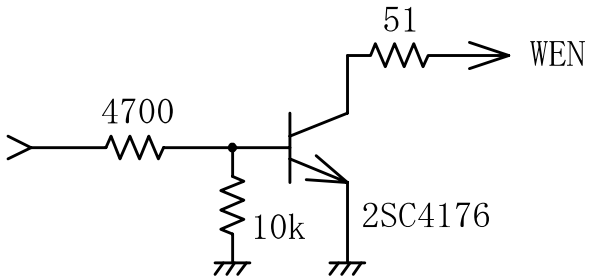

(14) Sensitivity setting Mode selection via panel SW (Initial factory setting: MGC)

AGC(Automatic Gain Control)

MGC (Manual Gain Control)

(15) MGC Manual sensitivity adjustment available

(16) Gamma 1.0 / 0.45 selectable via rear panel DIP switch

(Initial factory setting: 1.0)

(17) White clip Clip-level: 820±40mV(p-p) (Excluding SYNC)

(18) Electronic shutter <u>Normal shutter</u>

The following shutter speed setup is possible by rear panel DIP switch selection.

Normal,1/125,1/250, 1/500, 1/1000,1/2000, 1/4000, 1/10000s, and Flicker-less (Initial Factory setting: Normal)

<u>Slow-speed shutter</u>

1FLD, 2FLD, 4FLD, 6FLD, 8FLD, and 10FLD

(19) Random trigger shutter RTS Mode selection available

1	Shutter-speed Switch Setting	Internal sync	SYNC Non-reset
2	Shutter-speed TRIG Pulse-width Setting	Internal sync	SYNC Non-reset
3	Shutter-speed Switch Setting	Internal sync	SYNC Reset
4	Shutter-speed TRIG Pulse-width Setting	Internal sync	SYNC Reset
5	Shutter-speed Switch Setting	HD / VD IN (*1)	SYNC Non-reset
6	Shutter-speed TRIG Pulse-width Setting	HD / VD IN (*1)	SYNC Non-reset
7	Shutter-speed Switch Setting	HD / VD IN (*2)	SYNC Non-reset
8	Shutter-speed TRIG Pulse-width Setting	HD / VD IN (*2)	SYNC Non-reset

*1: Consecutive HD / Consecutive VD IN

*2: Consecutive HD / Single VD IN

(20) Special shutter User-defined shutter-timing and shutter-speed cued and timed by shutter trigger and restart / reset pulse input ON / OFF selectable via rear panel DIP SW (Initial factory setting: OFF)

(21) CCD integration mode Field / Frame storage(integration)
Switch-able by rear panel DIP Switch Selection (Initial factory setting : frame integration)

(22) Restart/Reset Restart / Reset function available via rear panel DIP-SW selection (Initial factory setting: OFF)

(23) Power source DC12V±10%[Ripple level : Less than 10mV(p-p)]

(24) Power consumption approx. 1.3W

(25) Ambient condition

・Performance assurance Temperature 0℃～40℃
Humidity 20～80% (No condensing)

・Operation assurance Temperature -10℃～50℃
Humidity 20～80% (No condensing)

・Storage Temperature -20℃～60℃
Humidity 20～95% (No condensing)

(26) Lens mount C-mount

(27) Flange back 17.526mm

(28) Dimensions 29(W)×29(H)×31(D)mm (Excluding protruding part)

(29) Mass Approx. 42g

(30) Option unit

・Power adapter CA130D (AC100V)

・Power / Video connector (Maker : Hirose denki)

HR10A-10P-12S

・Camera cable CPRC3700 (2m,3m, 5m, 10m)

・Tripod adapter

・IR cut filter

*** Conformity of EMC conditions**

About the conformity of the EMC standard of this machine, it has guaranteed in the conditions combined with the recommended parts.

When used combining parts other than specification of our company, I ask you to have final EMC conformity checked of a visitor with a machine and the whole equipment.

(31) Connector Pin Assignment

Compatible plug: HR10A-10P-12S (Manufactured by HIROSE ELEC.)

Pin No.	External sync.			Internal sync.
	HD VD	VS/SYNC	R.R.	
1	GND	GND	GND	GND
2	+12V	+12V	+12V	+12V
3	GND	GND	GND	GND
4	VIDEO OUT	VIDEO OUT	VIDEO OUT	VIDEO OUT
5	GND	GND	GND	GND
6	HD IN	-----	HD IN	HD OUT*
7	VD IN	VS/SYNC IN	R.R. IN	VD OUT*
8	GND	GND	GND	GND
9	CLOCK OUT	CLOCK OUT	CLOCK OUT	CLOCK OUT
10	WEN OUT	WEN OUT	-----	WEN OUT
11	TRIG IN	TRIG IN	TRIG IN	TRIG IN
12	GND	GND	GND	GND

* HD VD output is available via inner SW selection under internal sync operation.

5. Guarantee

The term of guarantee is one year after the product delivery.

If by any chance trouble by responsibility of our company occurs before an above period, TELI repairs it free of charge.

-During terms of a guarantee, when the trouble cause is the case of below, TELI charges the repair costs.

(1) Troubles and the damages that causes by misuse, unsuitable repair of remodeling.

(2) Distribution hazards like drops and vibrations after purchase. Troubles and damages by transportation.

(3) Troubles and damages by fire, natural calamity (earthquake, storm and flood damage, thunderbolt), damages from salty breeze, gas harm, abnormal voltage.

6. Repair

(1) Condition for repair

Basically, has to return it to our company when the user requests us to repair product.

Beside that, customer should pay these expenses (travel expenses, camera disassembly technology costs) of both customer and end user. Also customer should pay in themselves costs for return camera to us.

(2) The period of repairing product

- Repair free of charge Refer to Clause 5.
- Charged repair Basically, repair period is 7 years after the last production end of products.

7. Appearance

Typical spectral response

[The lens characteristics and light source characteristics is not reflected in the table.]

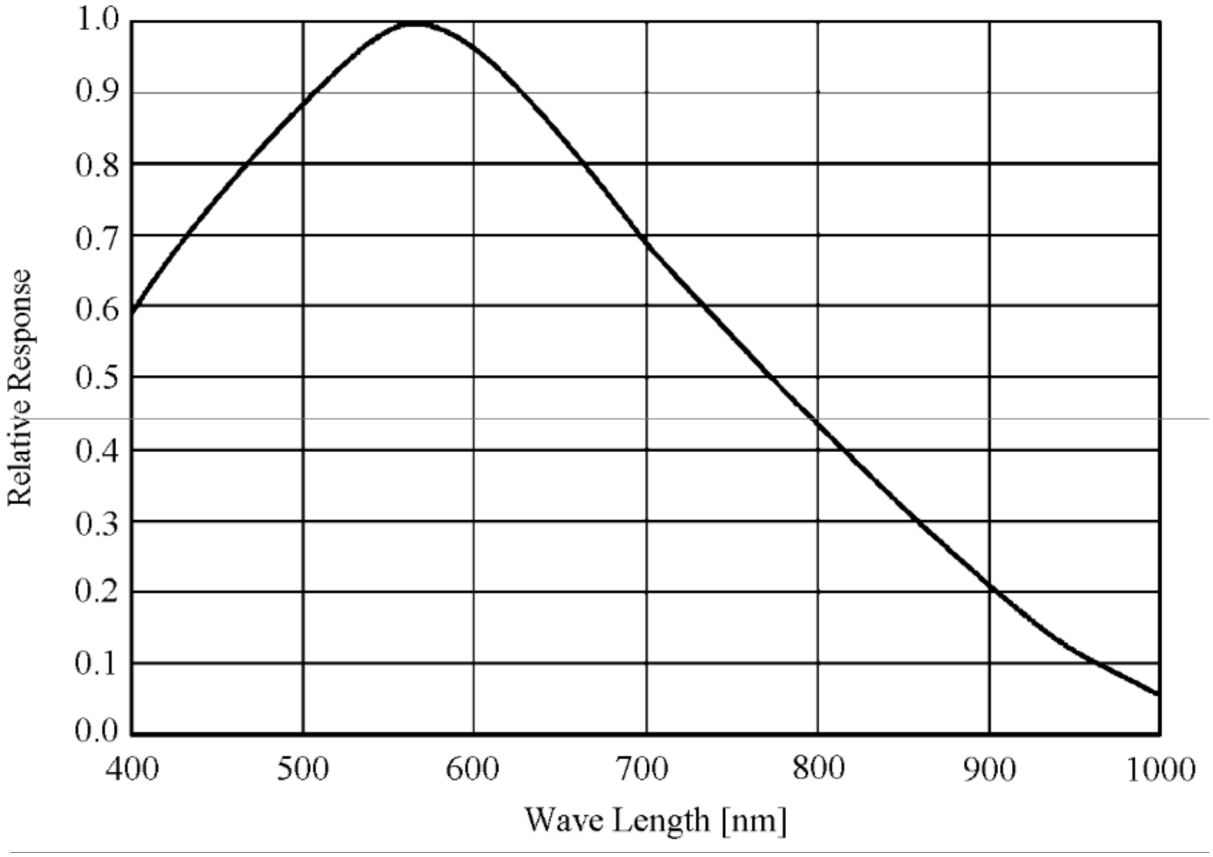

DRAWINGS

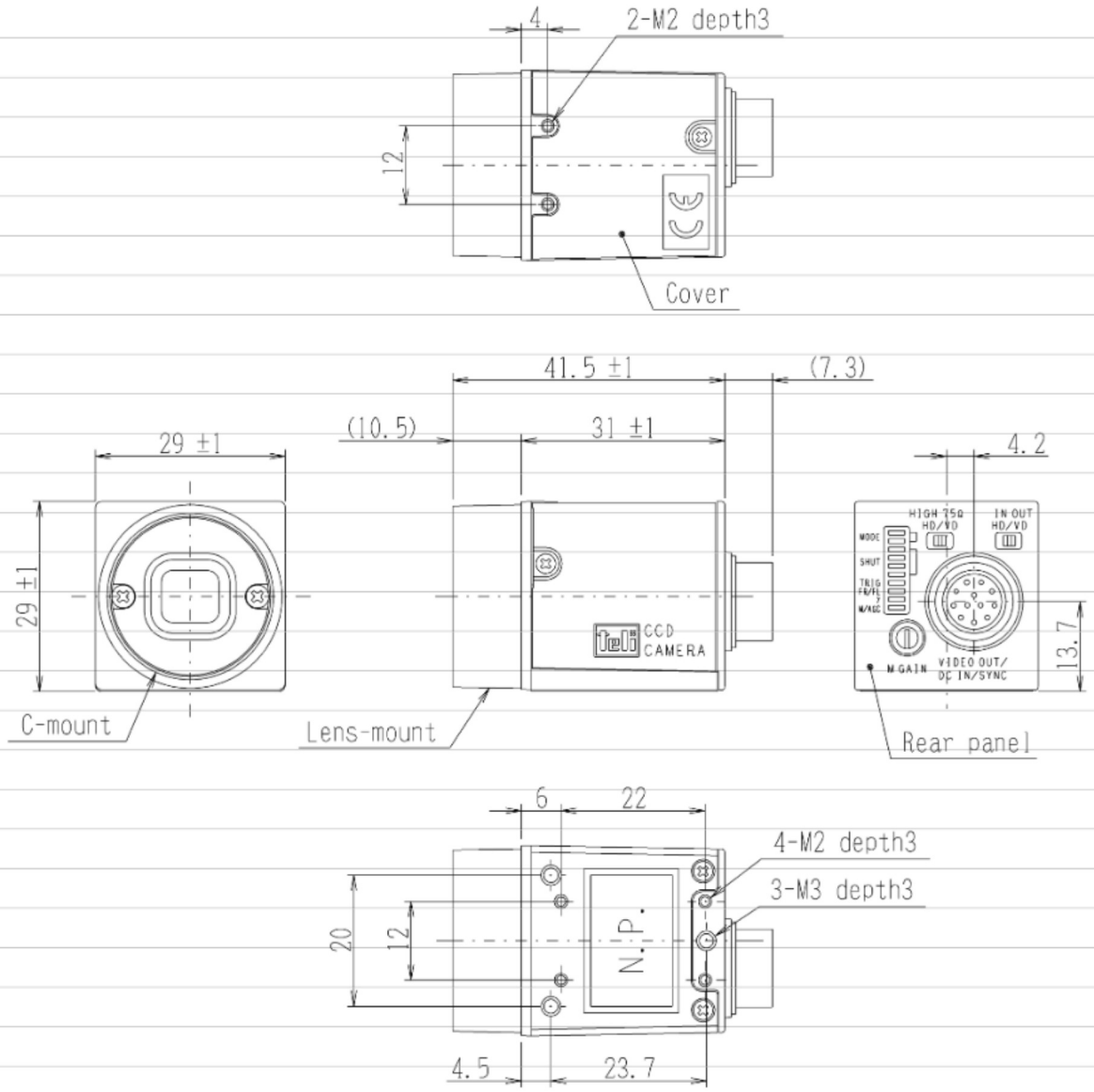

Specificatin

Material

Lens-mount, Rear panel : Aluminum die-cast

Cover : Anticorrosion aluminum alloy

Processing

Lens-mount, Rear panel : Cation coating

Cover : Leather satin coating (Black)