1. Product Description

Model CSB1100CL-10 is a high-resolution B/W CMOS camera achieving high-speed image processing by a random access.

2. Features

(1) Ultra-high resolution
The CSB1100CL-10 features a high-pixel CMOS sensor (Total pixel count: 1.31 Mega pixels), enabling high-density images (i.e., significantly reduced moiré and beat) to be obtained.

(2) Global shutter mode
This model features a Global shutter mode, which means that clear images of a fast-moving subject with little blurring are obtained.

(3) Random trigger shutter mode
This feature starts light-exposure in synchronization with an external trigger signal, and enables image capture at any given timing.

(4) WOI (Window Of Interest)
WOI is a feature enabling high-speed image processing.
By designating horizontal and vertical addresses, user-defined areas only are read out.

(5) High-dynamic range
This model features a high-dynamic range with multi slope integration mode, both high- and low-intensity subjects can be captured at the same time despite the high difference in contrast.

(6) SUBSAMPLING
Readout of active pixels is lowered, enabling increased frame rates.
This mode suitable for image orientation and confirmation.

3. Configuration

(1) Camera body ····· 1
(2) Operation Manual····· 1

4. Optional parts

(1) Power cable (Model name: CPC3910-**: 1m-9m)
(2) Camera Link cable (Model name: 14B26-SZLB-***-0LC :2m-10m)
(3) Camera mounting kit (CPT1100CL)
(4) TFL lens mount adapter (Model name: TCAR)
(5) Camera adapter (Model name: CA130C-01)
*NOTE: Application software is not supplied as a standard item.

*Conformity of optional peripherals and EMC regulations
The above-mentioned parts are guaranteed to conform to EMC standards.
If non-specified parts are to be used in combination, we suggest an inspection from one of our testing team to verify conformity with EMC standards.

5. Specification

Model	CSB1100CL-10
Image sensor	CMOS Image sensor
Total pixel	1280 (H) x 1024 (V)
Active pixel	1240 (H) x 1023 (V)
Pixel size	6.7 (H) x 6.7 (V) micro m
Image area	8.308 x 6.854 mm
Driving frequency	33.3333MHz
Scanning line	1023 lines
Scanning system	Progressive
Flame rate	22.2 fps (Exposure time: 65.8 micro sec)
Sync system	Internal
Aspect ratio	5:4
Subject illumination	2600 lx, F5.6 (3100K) (Exposure time: Approx. 16 ms)
Video output	Camera link (LVDS, 10bit, Pixel clock 33.3333MHz)
S/N	47 dB (p-p) / rms (Exposure time: Approx. 16 ms)
Control signal	Refer to COMMAND table
Electronic shutter	Shutter speed setting by any given timing through Camera Link communication command.
Shutter mode	Global shutter
Random Trigger Shutter	RTS operation is available by external trigger signal IN. Shutter speed preset or shutter speed control by pulse width is available. The exposure starts at shutter trigger rising edge and ends at shutter trigger falling edge under pulse width control for shutter speed.
Power source	DC12V +/- 10% (Source ripple level 100mV(p-p) or less)
Power consumption	Approx. 1.1W
Ambient condition	Temperature: (Performance guaranteed) From 0 through 40 degrees Celsius (Operation guaranteed) From -10 through 50 degrees Celsius (Preservation) From -20 through 60 degrees Celsius Humidity: (Performance guaranteed) From 20 through 80 % (No condensing) (Operation guaranteed) From 20 through 80 % (No condensing) (Preservation) From 20 through 95 % or less (No condensing)
Lens mount	C-mount
Flange back	17.526 mm
External dimension	44 (W) x 29 (H) x 52 (D) mm (Without projection)
Weight	Approx. 120 g
Electro-Magnetic Compatibility (1) EMI(Electro-Magnetic Interference) EN50081-2(EN55011-A) adaptation (2) EMS(Electro-Magnetic Susceptibility) EN61000-6-2 adaptation	

* Please contact our sales person about interface specification.

6. Connection

(1) DC IN

Connector (Camera side): HR10A-7R-6PB (Manufactured by HIROSE DENKI)
Plug (Cable side): HR10A-7P-6S (Manufactured by HIROSE DENKI)

Pin number	Signal name
1	N.C.
2	N.C.
3	GND
4	N.C.
5	N.C.
6	+12V

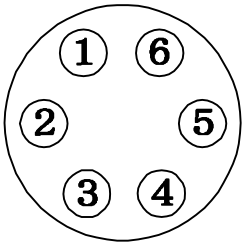

Rear–view

(2) DATA IN/OUT

Connector (Camera side): 10226-2210VE (Manufactured by 3M)
Connector (Cable side): 10126-6000 (Manufactured by 3M)

PIN.	Signal Name	I/O	PIN.	Signal Name	I/O
1	GND		14	GND	
2	TX OUT 0-	OUT	15	TX OUT 0+	OUT
3	TX OUT 1-	OUT	16	TX OUT 1+	OUT
4	TX OUT 2-	OUT	17	TX OUT 2+	OUT
5	TX CLK OUT-	OUT	18	TX CLK OUT+	OUT
6	TX OUT 3-	OUT	19	TX OUT 3+	OUT
7	Ser TC(RxD)+	IN	20	Ser TC(RxD)-	IN
8	Ser TFG(TxD)-	OUT	21	Ser TFG(TxD)+	OUT
9	Trig-	IN	22	Trig+	IN
10	EXT AFR+	IN	23	EXT AFR-	IN
11	EXT SP-	IN	24	EXT SP+	IN
12	EXT VR +	IN	25	EXT VR -	IN
13	GND		26	GND	

7. DIP switch setting

The setting of each mode can be done with DIP switches located on the rear panel.

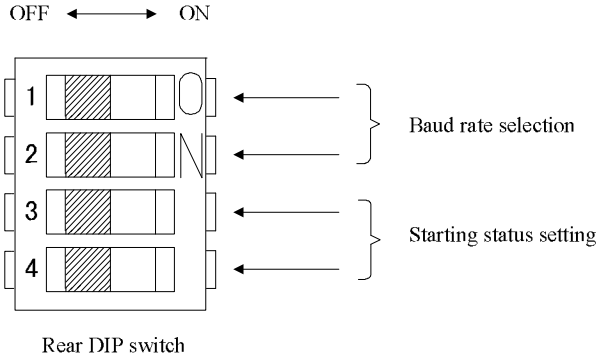

(1) Baud rate setting: Baud rate setting of camera IN /OUT

[1]	[2]	Baud rate
OFF	OFF	9600
ON	OFF	19200
OFF	ON	38400

(2) Starting status setting: Designate the memory page readout in starting up of a camera

[3]	[4]	Memory
OFF	OFF	0
ON	OFF	1
OFF	ON	2
ON	ON	3

8. Function

(1) Electronic shutter
The shutter-speed of CSB1100CL-10 is also manually adjustable. By manipulating the internal register setting value of CSB1100CL-10, you can change the shutter-speed by user-defined setting value of 65.8 micro sec step.

* The longer a user sets the exposure time, the more defective pixels on the image is outstanding. When you attach importance to image quality, it is recommendable to set the shutter speed at 30 msec or less.

(2) Random trigger shutter
Under the RTS mode, the camera can capture image at any user-defined timing with external trigger signal.
Under FIX mode, shutter speed can be set with the internal resister setting value.
Under pulse mode, shutter speed can be set with the trigger pulse width.
You can change the polarity of trigger pulse with the internal resister setting value.

* Random trigger shutter function is available only under global shutter mode.

(3)Sub-sampling
Horizontal and vertical thinning-out reading is performed at every 1 line.
3 types of settings are available (1/2 horizontal only, 1/2 vertical only and 1/2 both).
This function can read out the full image at high speed while its resolution is deteriorated.

* The combined use with WOI cannot be performed.

(4) Multi slope function
By changing a slope position with internal resister setting value, you can set the sensitivity matching to the subject luminance.
Refer to the interface specifications for the details of the setting method separately.

(5)WOI (Window of interest)
Only user-defined area can be captured by designating of the horizontal and the vertical address.
Up to 16 areas can be set in 1 screen.
This function can increase a frame rate because the area other than designated is not captured.
The minimum area size is 40 dot(H) x 1 dot(V).
Horizontal address can set up only even number.

The placement is available up to 16 windows in all active pixel area.

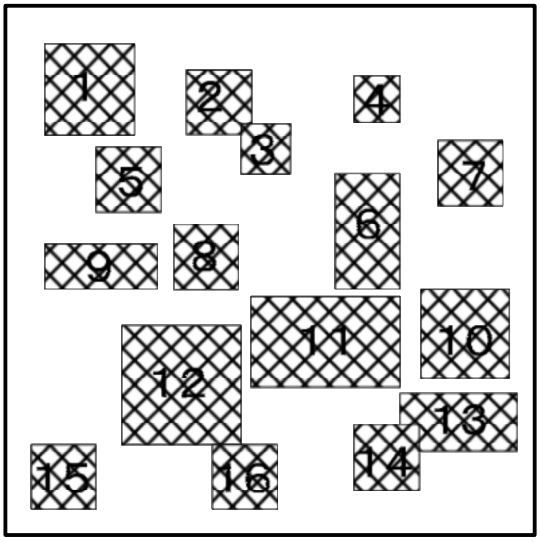

The setting of readout address is available up to 8 types.

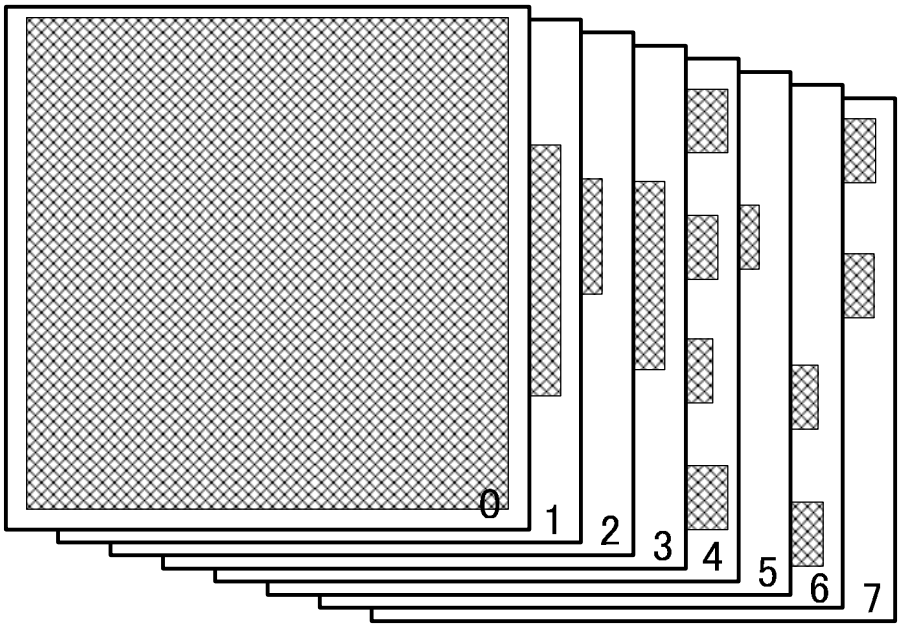

User can reprogram all setting types from 0 through 7.

Practical operation example

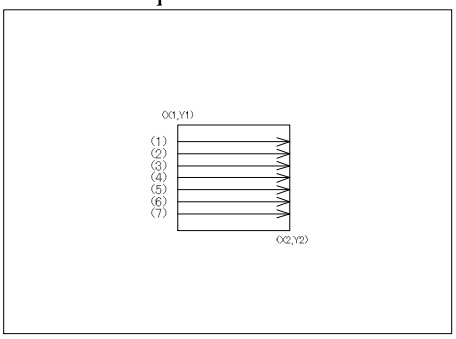

In the case of only one readout area
A readout area can be designated by the start address (X1, Y1) and the end address (X2, Y2). The camera can read out the user-defined area through this function.
The each address is designated by the start address and lengths (pixel numbers) of “X” and “Y” directions.

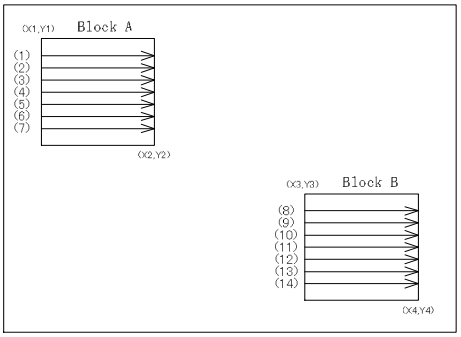

In the case of more than two readout areas
The area designated by the start address (X1, Y1) and the end address (X2, Y2) is read out first (block A in the left figure).
After reading out of block A, the next area designated by (X3, Y3) and (X4, Y4) is read out (block B in the left figure).

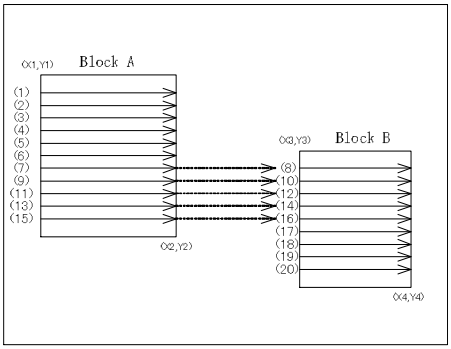

In the case of more than two readout areas which both comprise the same readout lines
The designated areas are read out in order of address from the start (X1, Y1) to the end (X4, Y4).

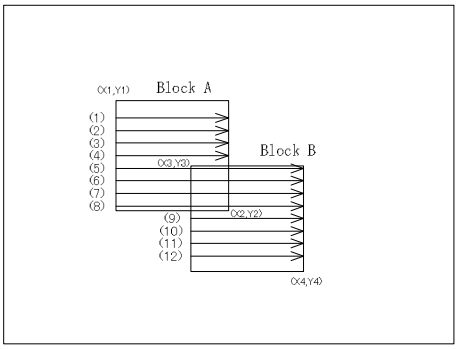

In the case of more than two readout areas overlapping each other
The designated areas are read out in order of address from the start (X1, Y1) to the end (X4, Y4).

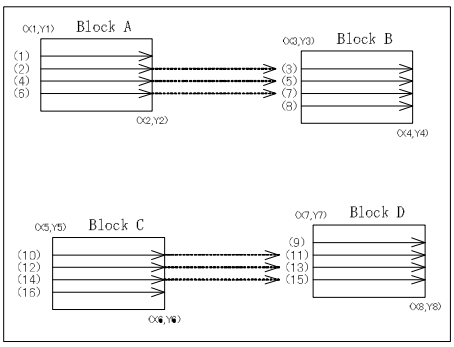

In the case of four readout areas
The designated areas are read out in order of address from start (X1, Y1) to the end (X8, Y8).

9. Timing Chart

(1) Normal shutter mode (in all pixel data readout)

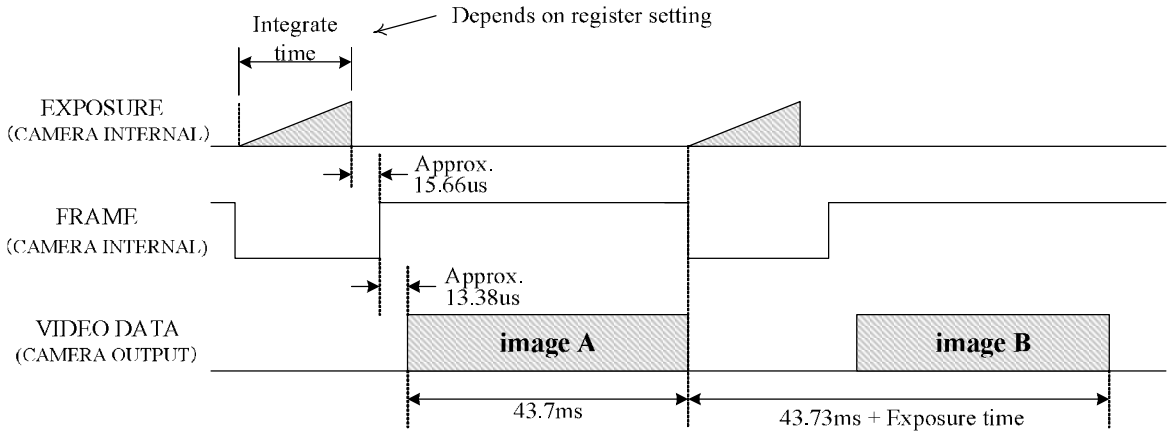

(2) Random Trigger Shutter mode (Fix mode)

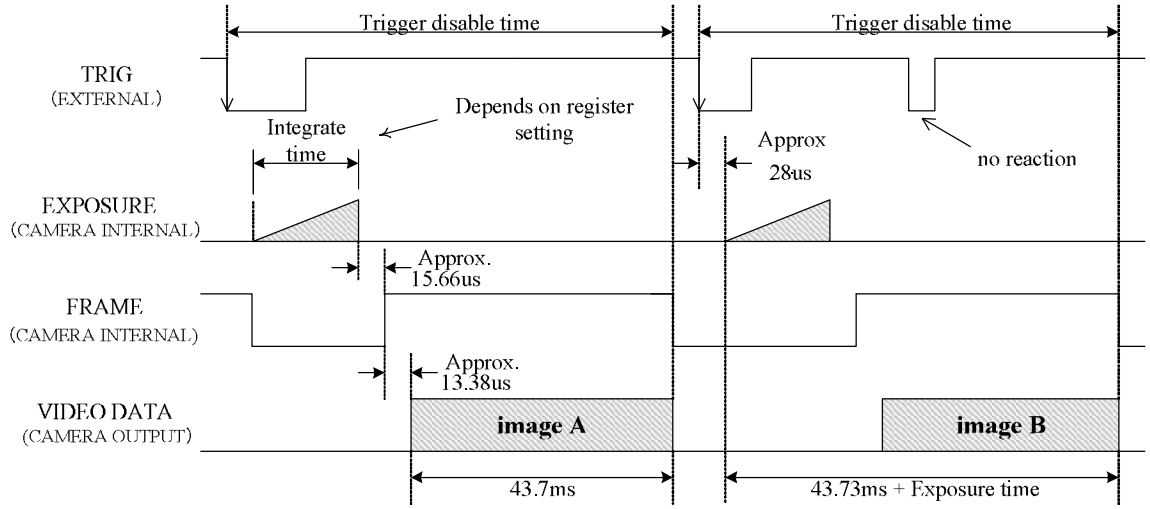

Shutter speed depends on the internal resister setting value.
After trigger IN, next trigger signal is not acceptable until the readout is completed.

(3) Random trigger shutter (pulse mode)
Shutter speed depends on the trigger pulse width.
After trigger IN, next trigger signal is acceptable until the readout is completed.

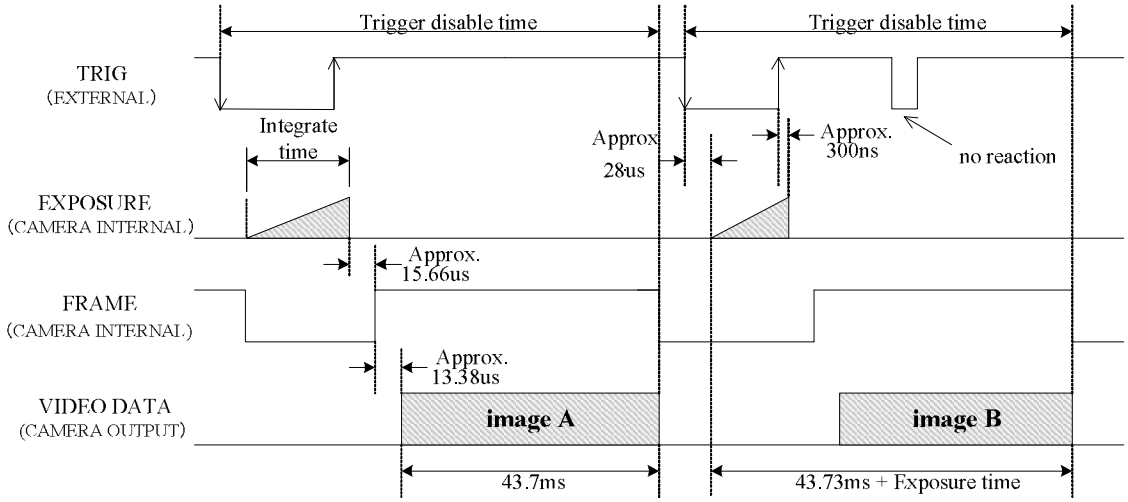

(4) WOI (Window of interest)

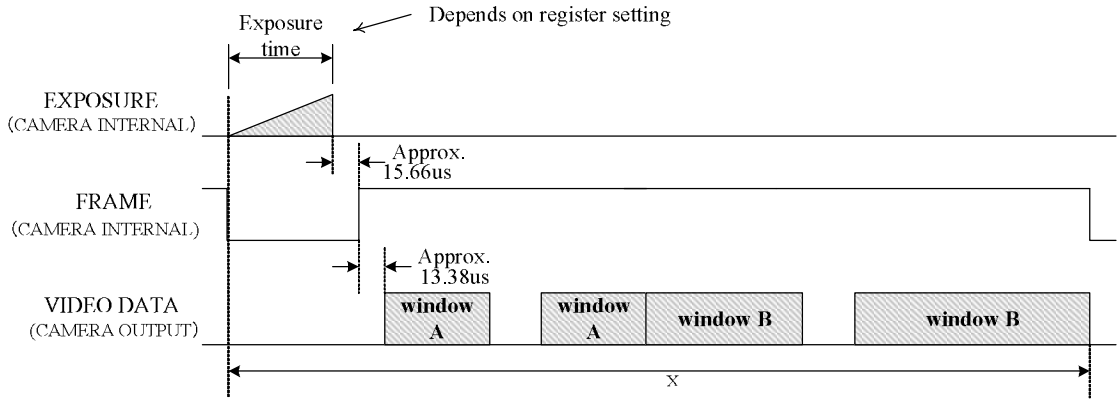

10. COMMAND Table

Video level	Setup
Shutter	Shutter mode
	Shutter speed
Trigger	Polarity
	Enable/Disable
Multi slope	Knee point number
	Shutter speed of each slope
Window	Enable/Disable
	Starting coordinate
	Ending coordinate
Memory	Setting value readout
	Setting value storage
	Resset
Other	Video OUT bit width
	Sub Sampling
	Vendor name
	Model name

11. External View