HDTV Color Monitor

Model LM-702HDA

LM-702HDA is a high performance Multi-format, Dual 7" Color LCD Monitor for the broadcast and professional market. A multitude of video signal formats may be accurately monitored. The high brightness, wide viewing angle, excellent contrast ratio and high definition color result in an outstanding image. The unit features inputs for SDI (either SD or HD) with an active output, Analog RGBHV, YPbPr Component Video, a Composite Video and a YC input. NTSC and PAL Television Standards are supported and automatically detected. SDI, AES and analog audio monitoring is standard and front panel tally LED's can be activated externaly via the DB9 connector. The OSD Menu contains all the necessary controls to adjust Contrast, Brightness, Sharpness, Color Level (R-G-B), and other parameters necessary for optimum monitor performance. Results of these adjustments can be viewed via the On Screen Display. A Sync Delay (Pulse Cross) mode allows viewing of the vertical and horizontal sync and vertical blanking intervals. A Blue Only mode facilitates accurate monitor setup when viewing color bars. A rack mount kit is included that can tilted up or down. Although the monitor has excellent viewing angles, the tilt feature can be beneficial when circumstances necessitate mounting the monitor considerably above or below normal eye level.

Key Features of the LM-702HDA

- Inputs: SD/HD-SDI, RGBHV, YPbPr, CV & YC
- Resolutions up to 1024x768, 1080p
- High Brightness, Pro Grade LCD Panels
- 262,000 Colors
- 400:1 Contrast Ratio
- Blue Only and Sync Delay modes for easy setup
- Audio Monitoring and Dual Tally LED's
- 140° Left/Right and 110° Up/Down View Angles
- Vertically Tiltable Rackmount Housing
- Locking External DC Power Supply

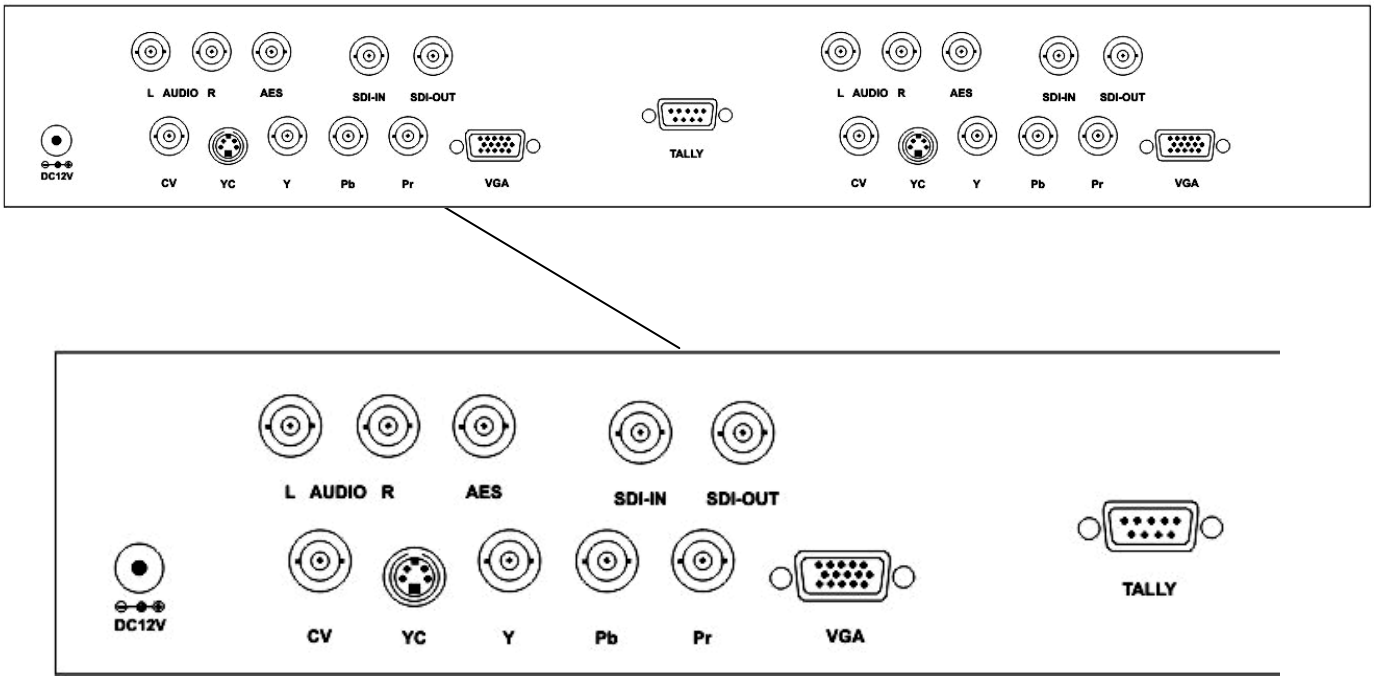

LM-702HDA Connector Panel Detail

Specifications

LCD Panel	
Display Size	7.0” (177mm) (Diagonal)
Display Area	6.03” x 3.54” (153 x 90mm)
Panel Resolution	1024 x 600 (16:9)
Dot Pitch	0.297mm
Color Resolution	262,000 Colors
Contrast Ratio	400:1
Brightness	250 cd/m2
Response Time	20 msec
Left/Right View Angle	140°
Up/Down View Angle	110°
Aspect Ratio	4:3 or 16:9
Video Inputs	
SD/HD-SDI	1x via BNC with Active Output
Analog RGBHV	1x via HD-15 Female
Composite Video	1x via BNC Connectors
YC (S-Video)	1x via 4-Pin Mini-DIN Connector
YPbPr Component	1x via 3 BNC Connectors
SD/HD-SDI Input Range	
SDTV	480i, 576i
HDTV	1080P/30Hz, 1080P/29.97Hz, 1080P/25Hz,1080P/24Hz, 1080P/23.98Hz 1080i/60Hz, 1080i/59.94Hz, 1080i/50 1035i/60Hz,1035i/59.94Hz 720P/60Hz, 720P/59.94Hz, 720P/50
Analog Component Input Range	
SDTV	480i, 576i
HDTV - YPbPr	480p, 576p, 720p, 1080i, 1080p
Analog RGBHV Input Range	
640x350	70, 85Hz
720x350	70, 85Hz
640x400	56, 70, 85Hz
720x400	70, 85Hz
640x480	60, 66, 72, 75, 85Hz
800x600	56, 60, 70, 72, 75, 85Hz
1024x768	60, 70, 72, 75, 85Hz
Composite & S-Video Input Range	
Vert. Frequency	NTSC 60Hz, PAL 50Hz
Horiz. Frequency	NTSC 15.75KHz, PAL 15.625KHz
Tally Control	
Tally Input	1x via DB9 Connector

Audio Monitoring Capability	
Input Connectors	SDI, AES via BNC, Analog via RCA
SDI Input	Selectable, up to 4 Stereo Channels
AES Input	1 Stereo Channel
Analog Input	L and R Channels
Visual Audio Level	Pseudo VU Meter via OSD
General	
Display Element	Active Matrix TFT
Video Adjustments	Brightness, Contrast, Sharpness, Color Level (RGB)
TV Standards	NTSC/ PAL Auto-detect
Aspect Ratio Modes	16:9, 4:3
SD-SDI	
HD-SDI	1.485, 1.4835Gpbs
Blue Only Mode	For Setup with Color Bars
Sync Delay Mode	For Checking Sync
Front Panel Controls	
Menu Navigation	Menu, Left, Right
Input Select	SDI, YPbPr, CV, SV, PC (RGBHV)
Power	On/Off
Limited Warranty	
Unit, except LCD	3 Year Parts and Labor
LCD Panel	Panel Manufacturer’s Terms
Mechanical	
Size (H-W-D)	132x483.5x150mm(5.2x19x5.9”)
Weight (Net)	5.5 kg (12.1 lbs)
Rackmount	3RU - Tilt Up/Down
Environmental	
Operating Temp.	0° to +50° C (+32° to +122° F)
Operating Humidity	10% to 90%, Non-condensing
Storage Temperature	-10° to +60° C (+14° to +140° F)
Storage Humidity	10% to 90%, Non-condensing
Power Requirement	
External Power Supply	100-240VAC@36Watts for 12 VDC
Regulatory Approvals	
Monitors	FCC, CE, RoHS
Power Supplies	UL, CUL, CE, PSE, GS, RoHS
Accessories Included	
1x Power Adapter	US, UK or Euro
1x Operations Manual	
4x Rackmount Screws	
Product Item Number	
LM-702HDA	Dual 7” Rack Mount LCD Monitor

Panel Drawings

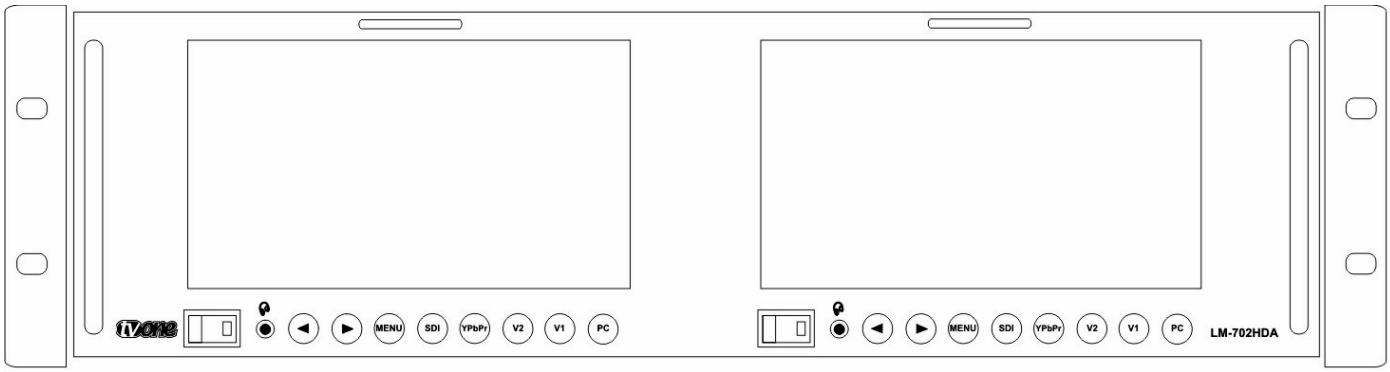

LM-702HDA Front Panel

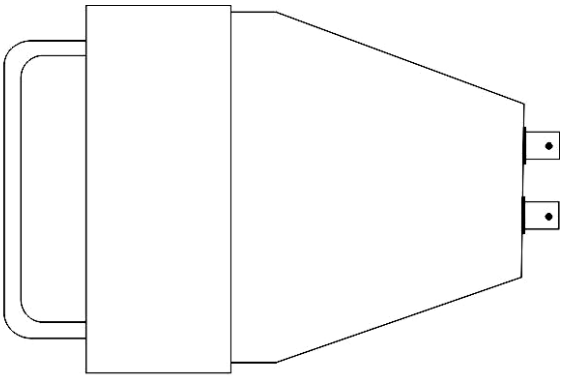

LM-702HDA Side View

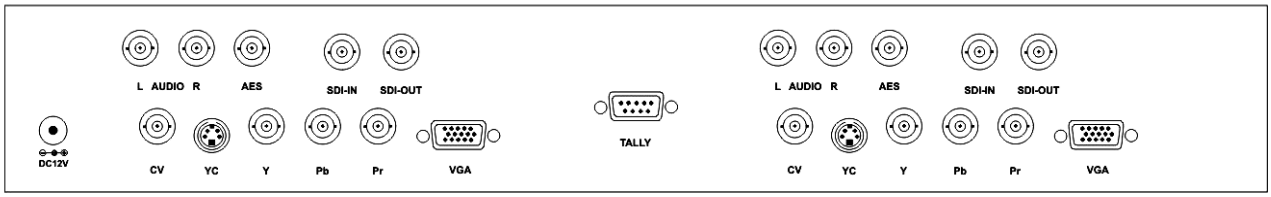

LM-702HDA Connector Panel